3.3. SECTION CONCLUSIONS

Matching a magnetostrictive transducer to water is a matter of selecting a horn type that fulfills the expression (19) at a given gain factor G, and of subsequent calculation of its resonance dimensions with the use of the system of equations (24). The most powerful horn, among the designs described above, is the full-wave barbell horn, which was chosen for the experimental investigations. During the experiments, evaluation of a set of such horns with different gain factors showed that all of them had the resonance and the gain factor characteristics that corresponded very well to those predicted theoretically. It was also experimentally verified that matching of the acoustic horns with water at cavitation, according to the theory described above, is truly established for all values of the output oscillation velocities of the horns.

It should be noted that matching an acoustic transducer to a load using an acoustic horn is not the only possible method of matching. Another powerful matching factor, which results from the specific properties of water at cavitation, is the static pressure, p_0, according to the expression (11) and the experimental results. It is clear that the best results are obtained when these two matching techniques are used jointly.

In conclusion, we would like to add that barbell horns also perform well in non-aqueous liquids and solutions with significant viscosity, and permit building very effective ultrasonic reactors, suitable for treatment of such liquids, for example oils, epoxy resins, honey, polymer melts, metal melts, etc.

Photographs presented in Figure 16 illustrate the primary (a) and secondary (b) cavitation zones formed during the operation of a full-wave barbell horn having an output diameter of 65 mm providing acoustic energy intensity of 2×10^5 W/m^2 in the primary cavitation zone below output tip.

In certain applications of powerful ultrasonic systems, however, it is more important to increase the residence time of the working liquid in the reactor, than to maximize the output amplitude. This is especially important during preliminary preparation for further high-amplitude processing, such as during pre-dispersion, pre-emulsification, treatment of high-viscosity liquids, etc. In these cases, it is convenient to utilize a long spool-shaped barbell horn, incorporated into a reactor chamber. Figure 17 shows such a horn (a) as well as the cavitation zones formed by it in a relatively viscous liquid, glycerin (b). This figure shows that two well developed secondary cavitation zones are formed near the two "necks" of the long spool-shaped barbell horn, constructed as two spool-shaped barbell horns connected in series.

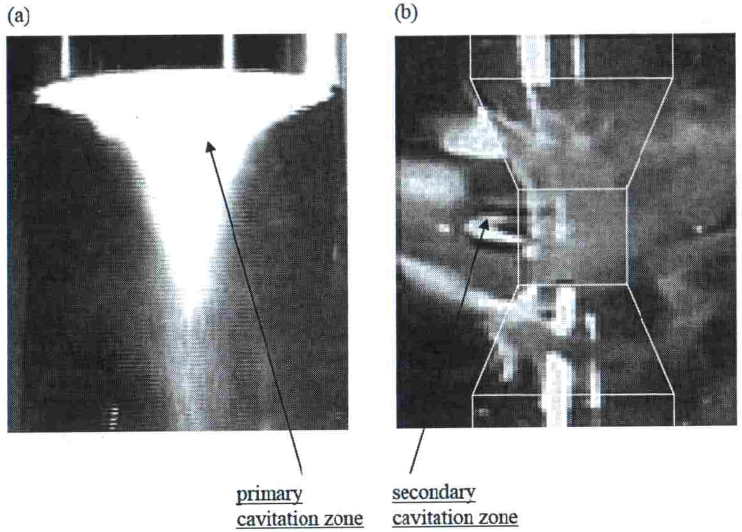

Figure 16. Experimentally obtained photographs of well developed stable cavitation zones are shown. The zones were created in an unrestricted volume of water by a barbell horn, having the following operational parameters: output tip diameter – 65 mm, ultrasound frequency – 18 kHz, acoustic energy intensity – 20 W/cm^2. Part (a) shows the primary cavitation zone under the horn tip; part (b) shows the secondary cavitation zone produced near the neck of the barbell horn (marked with a white line).

In semi-industrial ultrasonic reactor systems with relatively low transducer power (1 - 2 kW), it is convenient to use half-wave barbell horns, shown in Figure 14 (b). These horns are compact and have minimal losses due to the side-surface radiation.

All photographs shown above were obtained using ultrasonic equipment produced by Industrial Sonomechanics, LLC (ISM). Videos showing primary and secondary cavitation zones produced by barbell horns operating at a range of ultrasonic amplitudes are available at ISM's website [40].

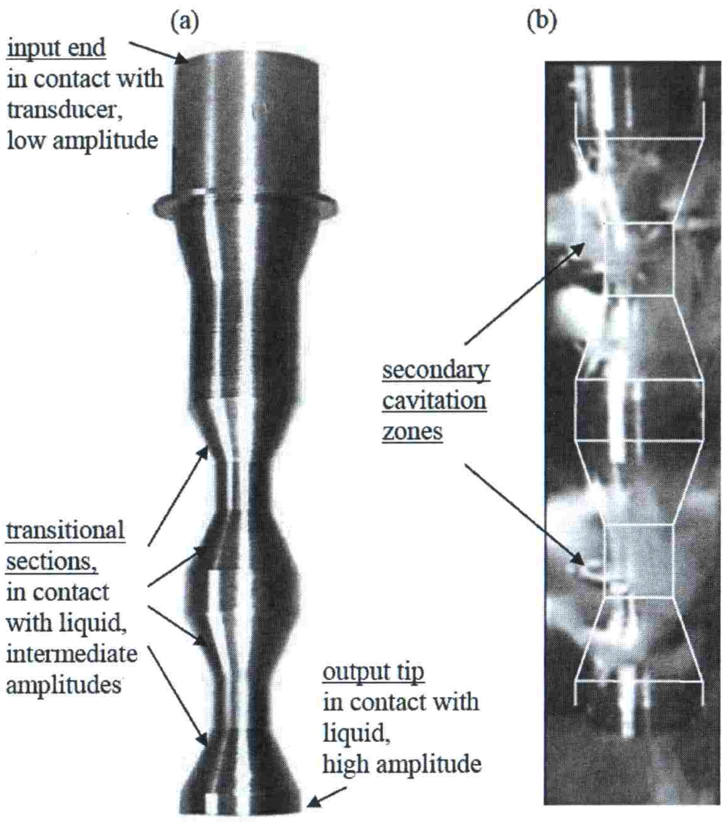

Figure 17. Photograph of a long spool-shaped barbell horn is shown in part (a). Photograph taken during operation of this horn in glycerin is displayed in part (b), showing multiple secondary cavitation zones formed near its transitional sections.

Chapter 4

ULTRASONIC REACTOR CHAMBER GEOMETRY

During a flow-through ultrasonic process, it is important to make sure that all working liquid is directed through the active cavitation zone, otherwise inhomogeneous processing may result, leading to a lower-quality product. Eliminating the low cavitation intensity areas in the reactor also helps increase the power density that the system can deposit into a liquid load. Optimization of the ultrasonic reactor chamber geometry, therefore, leads to an improvement in the technological effects obtained during the operation of the reactor.

In a common, unoptimized reactor chamber the treated liquid enters through the inlet at the bottom, passes through the primary cavitation zone of a horn, Figure 16 (a), flows along the horn's side surface and comes out through the outlet at the side of the chamber at the top. If a barbell horn is utilized, there is also a secondary cavitation zone near the transitional sections, as shown in Figure 16 (b), which accounts for approximately 20 % of the total radiated ultrasonic power. An optimized reactor chamber design would efficiently direct all treated liquid through both of these cavitation zones.

It has been explained above that the shape of a well developed cavitation zone formed at the bottom of a barbell horn resembles an upside-down circular cone. Therefore, it is beneficial to shape the bottom of the reactor chamber in the same manner, as shown in Figure 18. An approximately 20 % increase in the absorbed acoustic energy can be achieved due to the presence of a cone insert at the bottom of the reactor chamber, which optimizes the volume and the shape of the main cavitation zone at the output tip of the barbell horn [2]. To take the full advantage of the secondary cavitations zone, a liquid deflector ring may be inserted near the neck of the barbell horn (its second cylindrical section), as shown in Figure 18. Supplying the reactor chamber with both of these features dramatically improves the homogeneity of ultrasonic exposure of the working liquid and increases the total power deposition.

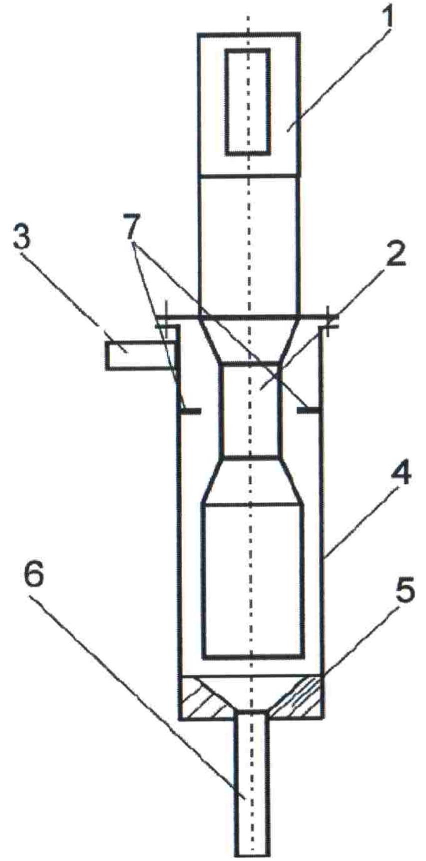

Figure 18. Schematic of an optimized flow-through ultrasonic reactor is presented, where 1 – electro-acoustical transducer, 2 – barbell horn, 3 – working liquid outlet, 4 – reactor chamber, 5 – upside-down circular cone insert, 6 – working liquid inlet, 7 – circular reflection surface.

Chapter 5

FINAL REMARKS

Industrial implementation of ultrasonic reactor systems has not reached its full potential. This is especially true when processes require high ultrasonic amplitudes, for example in production of nanoemulsions or nanodispersions. On the other hand, a large number of laboratory studies exist that demonstrate high potential effectiveness of ultrasonic processing in these and other areas [41, 42].

Since prior to the introduction of barbell horns the ultrasonic amplitude amplification was commonly done with converging horns, high-amplitude industrial-scale ultrasonic equipment was not available. Consequentially, transferring the results of many laboratory studies involving high-amplitude ultrasound to the plant floor has not been possible. Low-amplitude (below 30 μ_{pp}) industrial ultrasonic equipment has been around for several decades. This equipment, however, has had limited capability to translate optimized ultrasonic processes to commercial scale due to its inability to provide high-intensity cavitation in large reactor volumes. Additionally, this equipment has generally relied on piezoelectric transducer designs, which for industrial-scale liquid processing applications suffer from several important limitations compared with magnetostrictive devices.

The ultrasonic cavitation theory and main hardware design principles presented in this book provide the background necessary to construct high-capacity industrial ultrasonic systems with up to 10,000 L/h processing capability, able to operate at extremely high ultrasonic amplitudes in excess of 150 μ_{pp}. Using these systems, any laboratory study results can be directly implemented on industrial scale by simply increasing the horn tip diameter and the corresponding reactor volume and boosting the power of the generator and the transducer. All of the process parameters optimized during the laboratory study (ultrasonic amplitude, reactor residence time, pressure, etc.) can be retained, while the production rate may be increased by orders of magnitude.

REFERENCES

[1] S.L. Peshkovskiy, M.L. Friedman, and W.A. Hawkins, *Ultrasonic Rod Waveguide-Radiator*. 2004, Industrial Sonomechanics, LLC: U.S. Patent #7,156,201.

[2] S.L. Peshkovsky and A.S. Peshkovsky, *High Capacity Ultrasonic Reactor System*. 2008, Industrial Sonomechanics, LLC: International Application #PCT/US08/68697.

[3] T.G. Leighton, *Bubble population phenomena in acoustic cavitation.* Ultrason. Sonochem., 1995. 2: p. 123.

[4] H.G. Flynn, *Physics of acoustic cavitation in liquids*, in *Physical Acoustics, principles and methods*, W.P. Mason, Editor. 1964, Academic Press: New York and London. p. 78-172.

[5] M.S. Plesset and A. Prosperitty, Ann. Rev. Fluid Mech., 1977. 9.

[6] J.L. Laborde, A. Hita, J.P. Caltagirone, and A. Gerard, *Fluid dynamics phenomena induced by power ultrasounds.* Ultrasonics, 2000. 38: p. 297-300.

[7] W. Lauterborn and C.D. Ohl, *Cavitation bubble dynamics.* Ultrason. Sonochem., 1997. 4(2): p. 65-75.

[8] G. Servant, J.L. Laborde, A. Hita, J.P. Caltagirone, and A. Gérard, Spatio-temporal dynamics of cavitation bubble clouds in a low frequency reactor: comparison between theoretical and experimental results. Ultrason. Sonochem., 2001 8(3): p. 163-74.

[9] J. Klíma, A. Frias-Ferrer, J. González-García, J. Ludvík, V. Sáez, and J. Iniesta, Optimisation of 20 kHz sonoreactor geometry on the basis of numerical simulation of local ultrasonic intensity and qualitative comparison with experimental results. Ultrason. Sonochem., 2007 14(1): p. 19-28.

[10] W. Lauterborn, T. Kurz, R. Geisler, D. Schanz, and O. Lindau, *Acoustic cavitation, bubble dynamics and sonoluminescence.* Ultrason. Sonochem., 2007 14(4): p. 484-91.

[11] R. Mettin, P. Koch, W. Lauterborn, and D. Krefting. Modeling acoustic cavitation with bubble redistribution. in Sixth International Symposium on Cavitation, CAV2006. September 2006. Wageningen, The Netherlands.

[12] G. Servant, J.L. Laborde, A. Hita, J.P. Caltagirone, and A. Gérard, *On the interaction between ultrasound waves and bubble clouds in mono- and dual-frequency sonoreactors.* Ultrason. Sonochem., 2003 10(6): p. 347-55.

[13] R. Mettin, S. Luther, C.D. Ohl, and W. Lauterborn, *Acoustic cavitation structures and simulations by a particle model.* Ultrason. Sonochem., 1999 6(1-2): p. 25-9.

[14] S. Luther, R. Mettin, P. Koch, and W. Lauterborn, *Observation of acoustic cavitation bubbles at 2250 frames per second.* Ultrason. Sonochem., 2001 8(3): p. 159-62.

[15] J. Appel, P. Koch, R. Mettin, D. Krefting, and W. Lauterborn, *Stereoscopic high-speed recording of bubble filaments.* Ultrason. Sonochem., 2004 11(1): p. 39-42.

[16] A. Moussatov, C. Granger, and B. Dubus, *Cone-like bubble formation in ultrasonic cavitation field.* Ultrason. Sonochem., 2003. 10: p. 191–195.

[17] A. Moussatov, R. Mettin, C. Granger, T. Tervo, B. Dubus, and W. Lauterborn. *Evolution of acoustic cavitation structures near larger emitting surface*. in *World Congress on Ultrasonics, WCU2003.* September, 2003. Paris, France.

[18] P. Diodati and G. Giannini, *Cavitation damage on metallic plate surfaces oscillating at 20 kHz.* Ultrason. Sonochem., 2001 8(1): p. 49-53.

[19] Y.B. Zel'dovich and Y.P. Raizer, Physics of Shock Waves and High-Temperature Hydrodynamic Phenomena. 1966, New York: Acad. Press.

[20] R.A. Thuraisingham, *Sound speed in bubbly water at megahertz frequencies.* Ultrasonics, 1998. 36(6): p. 767-773.

[21] L. Van Vijngaarden, *Annual review of fluid mechanics*, in *Annual Review Inc.* 1972: Palo Alto. p. 369.

[22] L.D. Rosenberg, *High-intensity ultrasonic fields.* 1971, New York: Plenum Press.

[23] W. Herrmann, A Constitutive Equation for the Dynamic Compaction of Ductile Porous Materials. J. Appl. Phys., 1969. 40: p. 2490.

[24] A.D. Resnyansky and N.K. Bourne, *Shock-wave compression of a porous material.* J. Appl. Phys., 2004. 95: p. 1760-1769.

[25] M.G. Salvadori, R. Skalak, and P. Weidlinger, *Stress Waves in Dissipative Media.* Transactions New York Academy of Science, Ser. II, 1959. 21(5): p. 427-434.

[26] K. Fukushima, J. Saneyoshi, and Y. Kikuchi, *Ultrasonic Transducers*, ed. Y. Kikuchi. 1969, Tokyo: Corona Publ. Co.

[27] N.B. Brandt, A.D. Yakovlev, and S.L. Peshkovsky, Russ. Tech. Phys. Let., 1975. 1(10): p. 460.

[28] R.T. Knapp, J.W. Daily, and F.G. Hammitt, *Cavitation.* 1970 New York: McGraw-Hill.

[29] P. Chand, C.V. Reddy, J.G. Verkade, and D. Grewell. *Enhancing Biodiesel Production from Soybean Oil using Ultrasonics.* in *ASABE Paper No. 8*. 2008. St. Joseph, MI, USA.

[30] A.K. Singh, S.D. Fernando, and R. Hernandez, *Base-catalyzed fast transesterification of soybean oil using ultrasonication.* Energy & Fuels, 2007. 21: p. 1161-1164.

[31] G. Towerton, *The use of ultrasonic reactors in a small scale continuous biodiesel process*. 2007, G&M Global Enterprises Inc.: Amarillo, TX, USA. p. 1-4.

[32] U.S. Bhirud, P.R. Gogate, A.M. Wilhelm, and A.B. Pandit, Ultrasonic bath with longitudinal vibrations: a novel configuration for efficient wastewater treatment. Ultrason. Sonochem., 2004. 11: p. 143-147.

[33] E. Eisner, *Physical Acoustics*, in *Methods and Devices, Part B*, W.P. Mason, Editor. 1964, Acad. Press: New York.

[34] S. Sherrit, S.A. Askins, M. Gradziol, B.P. Dolgin, X.B.Z. Chang, and Y. Bar-Cohen, *Novel Horn Designs for Ultrasonic/Sonic Cleaning, Welding, Soldering, Cutting and Drilling.* Proceedings of the SPIE Smart Structures Conference, San Diego, CA, 2002. 4701: p. Paper No. 34.

[35] J.W. Rayleigh (Strutt), *The Theory of Sound.* 1945, New York: Dover Publications.

[36] J.A. Gallego Juárez, G. Rodríguez Corral, E. Riera Franco de Sarabia, C. Campos Pozuelo, F. Vázquez Martínez, and V.M. Acosta Aparicio, *A Macrosonic System for Industrial Processing.* Ultrasonics, 2000. 38: p. 331-336.

[37] Y. Kikuchi, *Ultrasonic Transducers*, ed. Y. Kikuchi. 1969, Tokyo Corona Publ. Co.

[38] E.A. Neppiras, Measurements in liquids at medium and high ultrasonic intensities. Ultrasonics, 1965. 3(1): p. 9-17.

[39] L.G. Merkulov and A.B. Kharitinov, *Theory and analysis of sectional concentrators.* Sov. Phys. - Acoust., 1959(5): p. 183-90.

[40] http://www.sonomechanics.com

[41] J.P. Canselier, H. Delmas, A.M. Wilhelm, and B. Abismaïl, *Ultrasound Emulsification—An Overview.* Journal of Dispersion Science and Technology, 2002. 23(1): p. 333 – 349.

[42] T.J. Mason and J.P. Lorimer, Applied Sonochemistry: Uses of Power Ultrasound in Chemistry and Processing. 2002, Weinheim: Wiley-VCH. 303.

INDEX

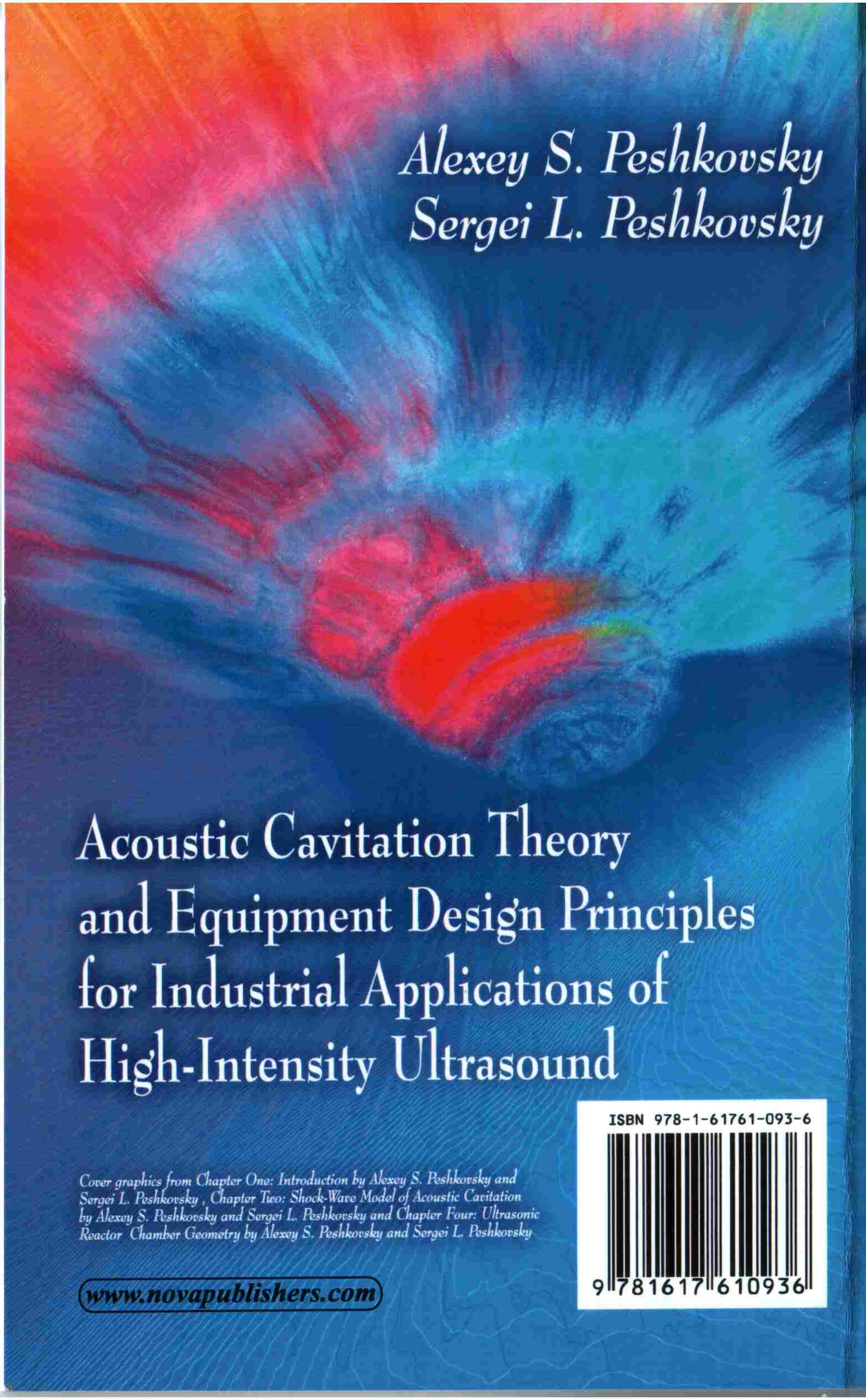

Alexey S. Peshkovsky
Sergei L. Peshkovsky

Acoustic Cavitation Theory and Equipment Design Principles for Industrial Applications of High-Intensity Ultrasound

Cover graphics from Chapter One: Introduction by Alexey S. Peshkovsky and Sergei L. Peshkovsky , Chapter Two: Shock-Wave Model of Acoustic Cavitation by Alexey S. Peshkovsky and Sergei L. Peshkovsky and Chapter Four: Ultrasonic Reactor Chamber Geometry by Alexey S. Peshkovsky and Sergei L. Peshkovsky

ISBN 978-1-61761-093-6

9 781617 610936

www.novapublishers.com